REV.NO.	REVISION DESCRIPTION	DRAWN / DATE	REVIEWED / DATE	APPROVED / DATE
0	ISSUE FOR APPROVAL	DKMIN/080229		
1				

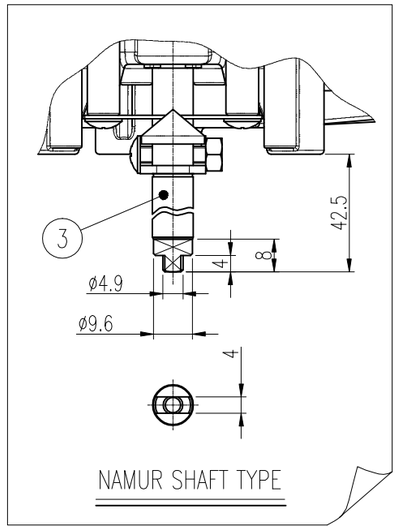

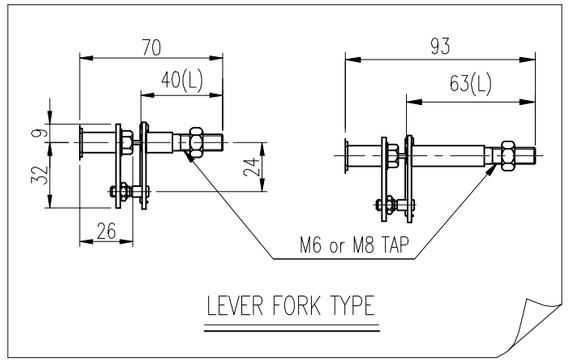

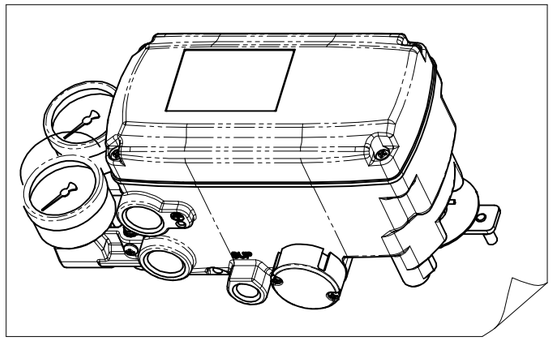

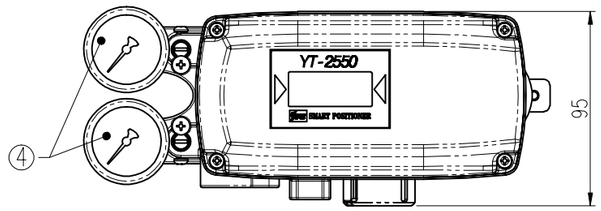

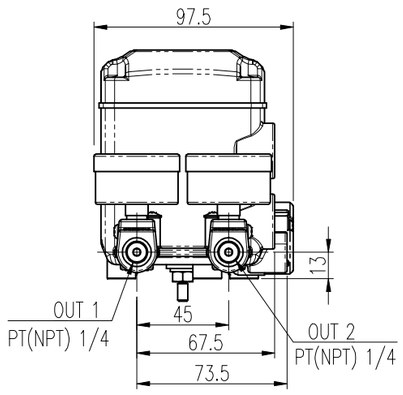

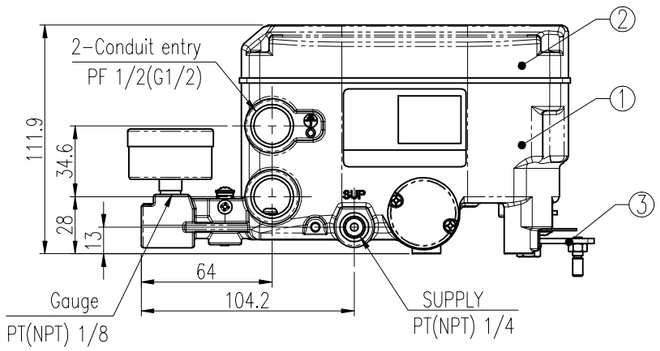

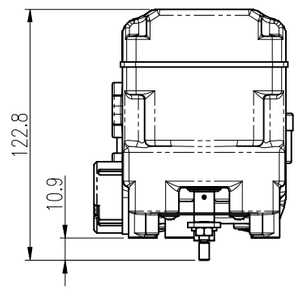

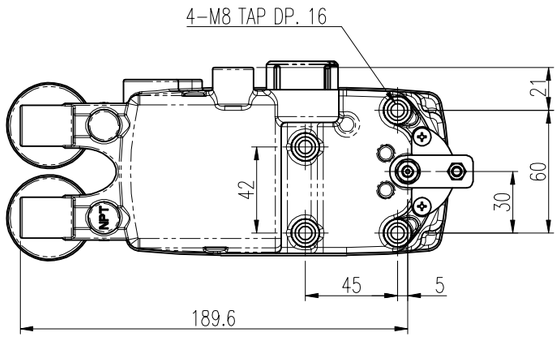

SPECIFICATIONS

Acting Type		Double		
Input Signal		4 ~ 20mA DC		
Supply Pressure		1.4 ~ 7kgf/cm²(20 ~ 100 psi)		
Explosion Proof		☐ Non-Explosion	☐ Ex ia IIC T5	☐ Ex ia IIC T6
Stroke		0˚ ~ 90˚, 0˚ ~ 60˚		
Impedance		Max 460 Ohm/20mA DC		
Difference Voltage		bellow 8.5 Vdc		
Air Connection	Supply	PT(NPT) 1/4		
	Out 1			
	Out 2			
Gauge Connection	Out 1	PT(NPT) 1/8		
	Out 2			
Conduit		PF 1/2 (G 1/2)		
Repeatability		±0.3% F.S.		
Ambient Temp.	Operation	-30 ~ 85˚C (-22 ~ 185˚F)		
	Explosion	-40 ~ 60˚C(T5) / -40 ~ 40˚C(T6)		
Hysteresis		±0.5% F.S.		
Sensitivity		±0.2% F.S.		
Linearity		±0.5% F.S.		
Main Board	MPU	16 bit Micro Controller		
	A/D Converter	12 bit		
	D/A Converter	12 bit		
Output Characteristics		☐ Linear	☐ EQ%	
		☐ User defined	☐ Quick Open	
Material		Stainless steel 316		
Protection		IP66		
Weight		2.9kg (6.4 lb)		
Actuator Shaft		☐ M6	☐ L=40	☐ NAMUR
		☐ M8	☐ L=63	

NO.	PART NAME	MATERAL	Q'TY	REMARK
4	PRESSURE GAUGE	STS304	2	
3	LEVER CONNECT ASS'Y	STS 303, 304P	1	FORK LEVER, NAMUR
2	COVER BASE	STS316	1	
1	BODY BASE	STS316	1	

SURFACE TEXTURE	PRODUCT NAME: SMART POSITIONER	YOUNG TECH CO., LTD. SEOUL, KOREA	
FINISH TREATMENT	MODEL: YT-2550R (DOUBLE)	TITLE: SMART ROTARY POSITIONER ASS'Y DWG	
MATERIAL	PROJECTION: 3rd / SCALE: 1 / 3	DRAWING NO. YT-2550R (DOUBLE) STANDARD	REV. 0
OTHERWISE NOTE / GENERAL TOLERANCE	QUANTITY: 1 / SHEET No.: 1 / 1		

YTC-A3