REV.NO.	REVISION DESCRIPTION	DRAWN / DATE	REVIEWED / DATE	APPROVED / DATE
0	DRAWING ARRANGEMENT	HSS/090223	JCS/090223	LYH/090223

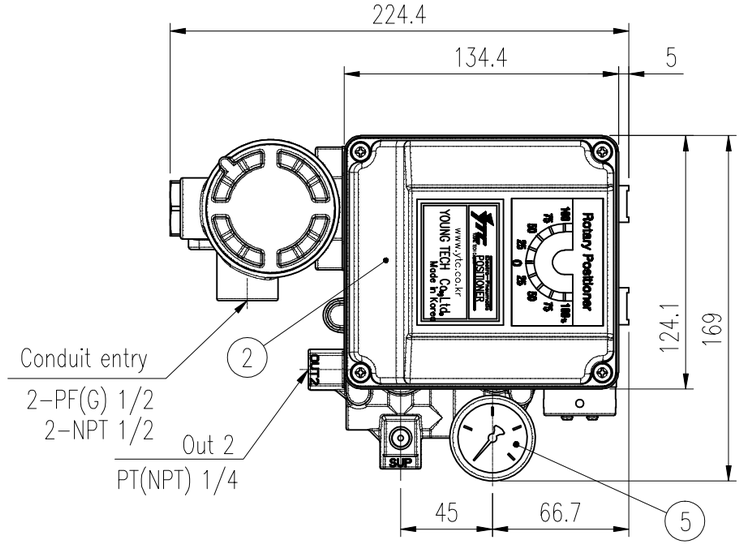

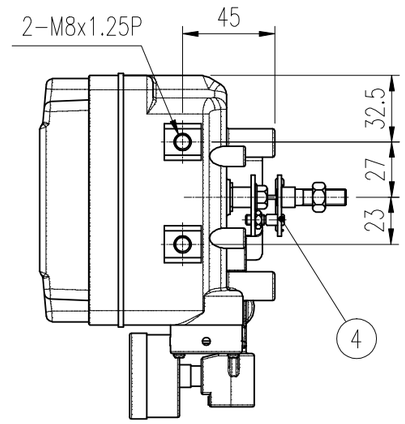

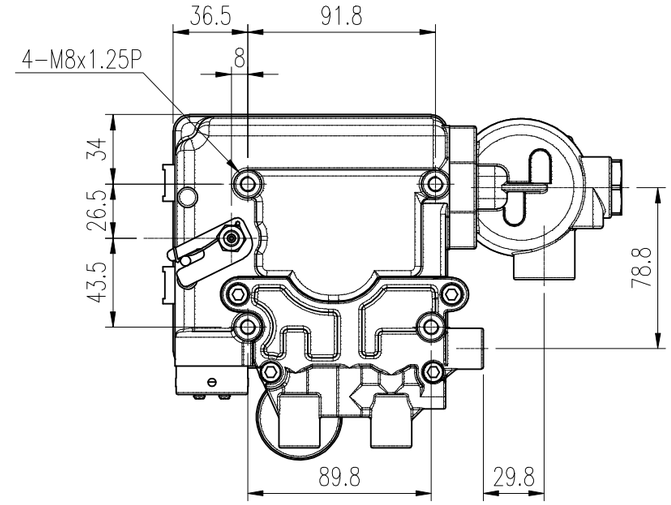

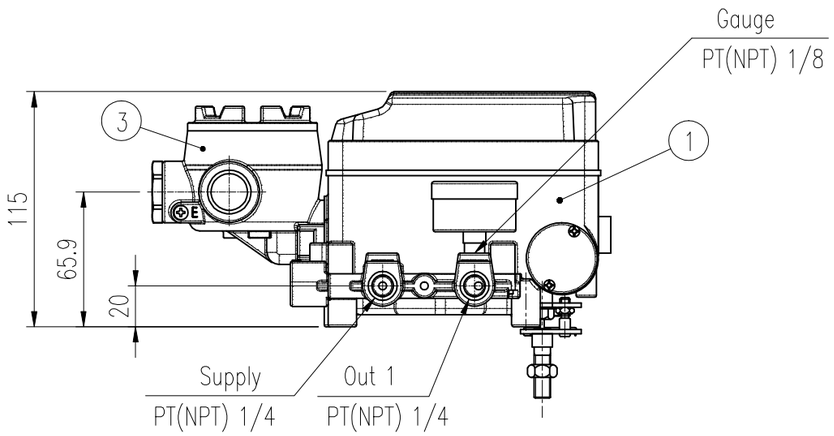

SPECIFICATIONS

Applicable Fluid		Air		pressure Gauge	☐ 0~2kgf/cm²	☐ 0~4kgf/cm² ☐ 0~10kgf/cm²
Acting Type		☐ Single	☐ Double	Linearity	±1.0% F.S.	±2.0% F.S.
Input Signal		4 ~ 20 mA DC		Hysteresis	±1.0% F.S.	
Impedance		250±15 Ω		Sensitivity	±0.2% F.S.	±0.5% F.S.
Supply Pressure		1.4~7kgf/cm² (20~100psi)		Repeatability	±0.5% F.S.	
Stroke		0° ~ 90°		Air Consumption	3 LPM (Sup.=1.4kgf/cm², 20psi)	
Air Connection		PT(NPT) 1/4		Flow Capacity	80 LPM (Sup.=1.4kgf/cm², 20psi)	
Gauge Connection		PT(NPT) 1/8		Protection	IP66	
Conduit entry		PF 1/2 (G 1/2), NPT 1/2		Weight	5.7kg (12.6lb)	
Explosion Proof		☐ Ex dm IIB T5	☐ Ex dm IIC T5	Actuator Shaft	☐ M6	☐ L=34 ☐ NAMUR
		☐ Ex ia IIB T6	☐ Non-Explosion		☐ M8	☐ L=63
Ambient Temp	Operation	-20°C ~ 70°C (-4 ~ 158°F)		Material	Stainless Steel 316	
	Explosion	-20°C ~ 60°C (-4 ~ 140°F)				

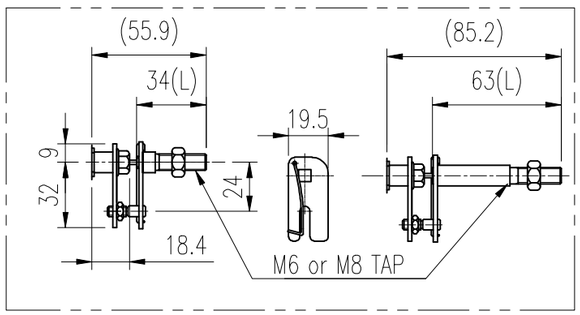

FORK LEVER TYPE

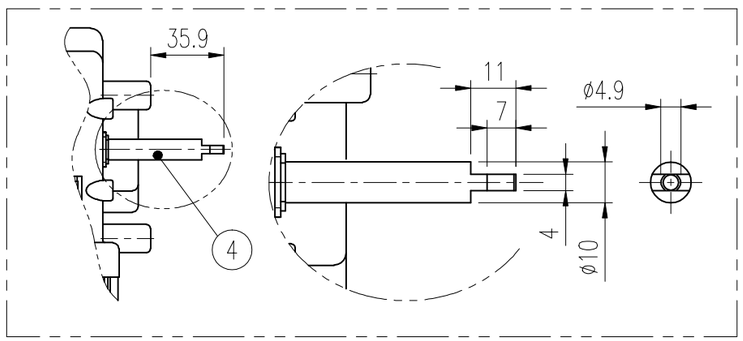

NAMUR SHAFT TYPE

NO.	PART NAME	MATERIAL	Q'TY	REMARK
5	PRESSURE GAUGE	STS304	1	
4	FEEDBACK LEVER	STS316	1	
3	JUNCTION BOX	STS316	1	
2	BASE COVER	STS316	1	
1	BASE BODY	STS316	1	

PROJECT NAME –

SURFACE TEXTURE	PRODUCT NAME E/P POSITIONER	YOUNG TECH CO., LTD. SEOUL, KOREA	
FINISH TREATMENT	MODEL YT-1050R	TITLE ELECTRO PNEUMATIC ROTARY POSITIONER ASS'Y DWG (STANDARD)	
MATERIAL	PROJECTION 3rd / SCALE 1 / 3		
OTHERWISE NOTE / GENERAL TOLERANCE	QUANTITY 1 / SHEET No. 1 / 1	DRAWING NO. YT-1050R STANDARD	REV. 0

YTC-A3