REV.NO.	REVISION DESCRIPTION	DRAWN / DATE	REVIEWED / DATE	APPROVED / DATE
0	ISSUE FOR APPROVAL	HSS/071219	JCS/071219	LYH/071219
1	DRAWING ARRANGEMENT	HSS/080305	JCS/080305	LYH/080305

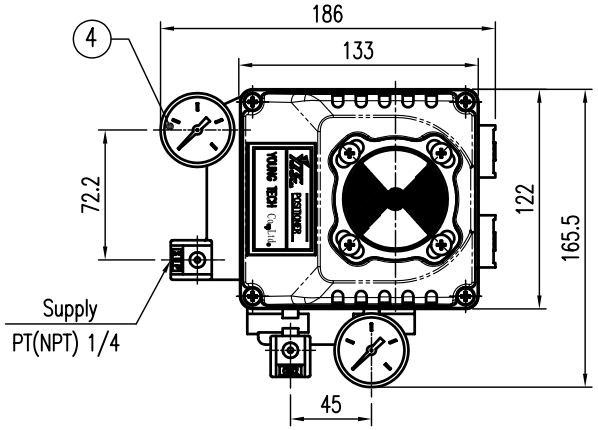

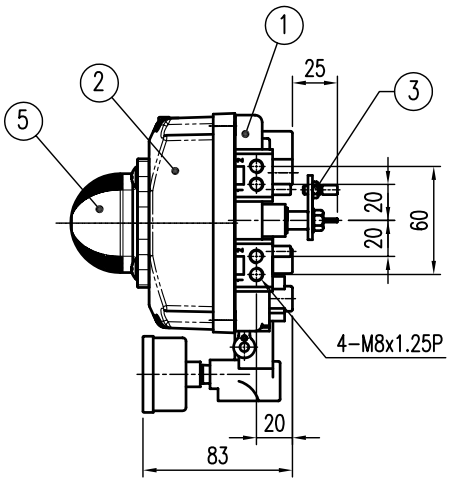

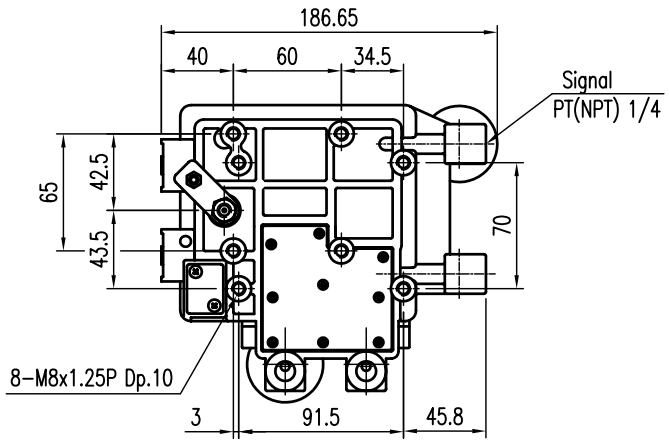

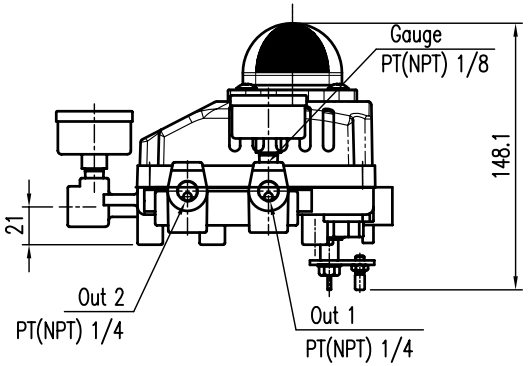

SPECIFICATIONS

Applicable Fluid	Air	Ambient Temp.	-20°C ~ 70°C (-4°F ~ 158°F)
Acting Type	☐ Single ☐ Double	Linearity	±2.0% F.S.
Input Signal	0.2 ~ 1kgf/cm² (3 ~ 15psi)	Hysteresis	±1.0% F.S.
Supply Pressure	1.4 ~ 7kgf/cm² (20 ~ 100psi)	Sensitivity	±0.5% F.S.
Stroke	0~90°	Repeatability	±0.5% F.S.
Protection	IP66	Air Consumption	3 LPM (Sup.=1.4kgf/cm², 20psi)
Air Connection	PT(NPT) 1/4	Max. Flow Capacity	80 LPM (Sup.=1.4kgf/cm², 20psi)
Gauge Connection	PT(NPT) 1/8	Material	Aluminum Diecasting
Pressure Gauge (Output Pressure)	☐ 0~2kgf/cm²	Weight	1.7kg (3.1lb)
	☐ 0~4kgf/cm²	Lever Type	☐ M6 ☐ L=34 ☐ Namur
	☐ 0~10kgf/cm²		☐ M8 ☐ L=63

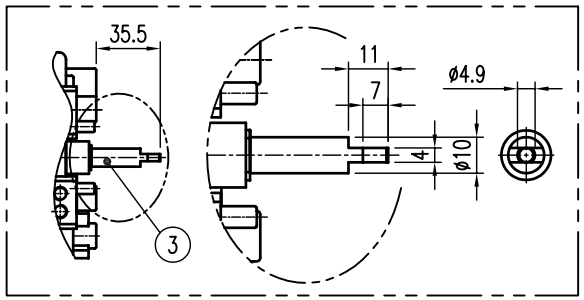

NAMUR SHAFT TYPE

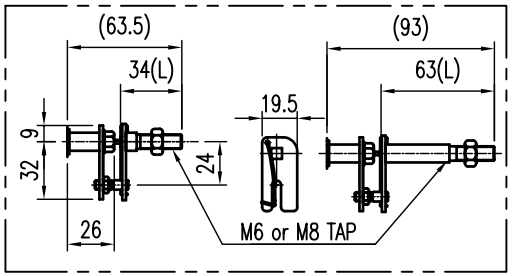

FORK LEVER TYPE

NO.	PART NAME	MATERIAL	Q'TY	REMARK
5	INDICATOR	PC	1	
4	PRESSURE GAUGE	STS 304	2	
3	CONNECT LEVER ASS'Y	STS 303, 304P	1	FORK LEVER, NAMUR
2	BASE COVER	ALDC12	1	DOME TYPE
1	BASE BODY	ALDC12	1	

PROJECT NAME –

SURFACE TEXTURE	PRODUCT NAME P/P POSITIONER	YOUNG TECH CO., LTD. SEOUL, KOREA	
FINISH TREATMENT	MODEL YT-1200R	TITLE PNEUMATIC-PNEUMATIC ROTARY POSITIONER ASS'Y DWG	
MATERIAL	PROJECTION 3rd / SCALE 1 / 3		
OTHERWISE NOTE / GENERAL TOLERANCE	QUANTITY 1 / SHEET No. 1 / 1	DRAWING NO. YT-1200R + DOME TYPE	REV. 1

YTC-A3