REV.NO.	REVISION DESCRIPTION	DRAWN / DATE	REVIEWED / DATE	APPROVED / DATE
3	DRAWING ARRANGEMENT	HSS/060907	KCH/060907	LYH/060907
4	DRAWING ARRANGEMENT	HSS/080305	JCS/080305	LYH/080305

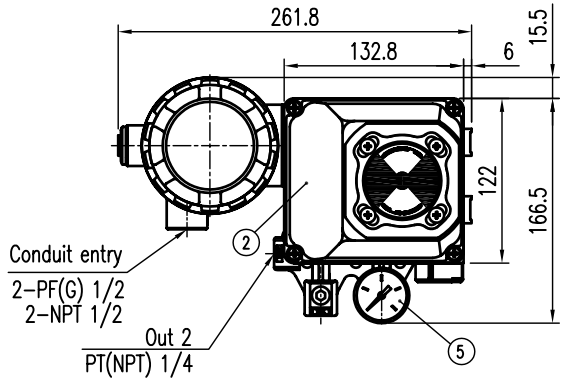

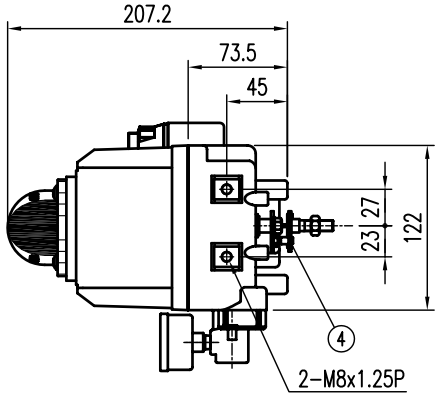

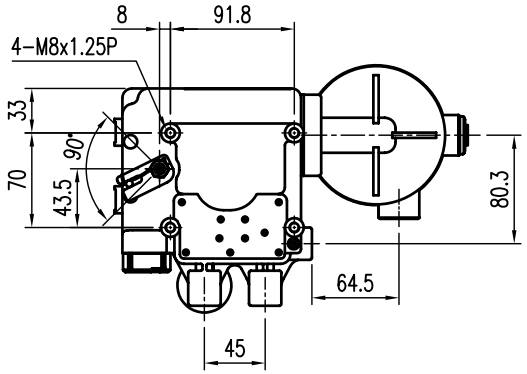

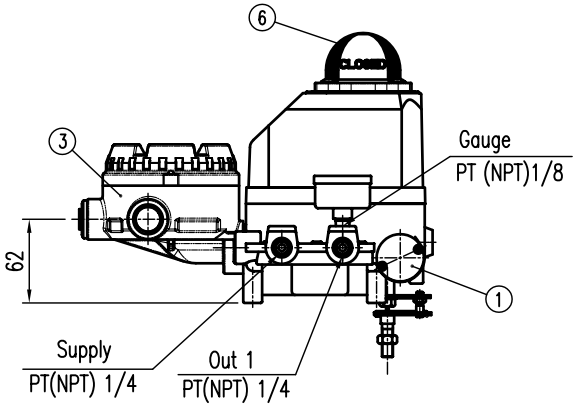

SPECIFICATIONS

Applicable Fluid	Air	
Acting Type	☐ Single	☐ Double
Input Signal	4 ~ 20 mA DC	
Impedance	250±15 Ω	
Supply Pressure	1.4~7kgf/cm² (20~100psi)	
Stroke	0° ~ 90°	
Air Connection	PT(NPT) 1/4	
Gauge Connection	PT(NPT) 1/8	
Conduit entry	PF 1/2 (G 1/2), NPT 1/2	
Explosion Proof	Non-Explosion	
Ambient Temp.	-20°C ~ 70°C (-4 ~ 158°F)	

pressure Gauge	☐ 0~2kgf/cm²	☐ 0~4kgf/cm²	☐ 0~10kgf/cm²
Linearity	±1.0% F.S.	±2.0% F.S.	
Hysteresis	±1.0% F.S.		
Sensitivity	±0.2% F.S.	±0.5% F.S.	
Repeatability	±0.5% F.S.		
Air Consumption	3 LPM (Sup.=1.4kgf/cm², 20psi)		
Flow Capacity	80 LPM (Sup.=1.4kgf/cm², 20psi)		
Protection	IP66		
Weight	3.5kg (7.7lb)		
Actuator Shaft	☐ M6	☐ L=34	☐ NAMUR
	☐ M8	☐ L=63	
Material	ALUMINUM DIECASTING		

SPECIFICATIONS (LIMIT SWITCH)

2-DPDT Type

DPDT TYPE	Switch Type	2 X DPDT
	Rating	8A, 250VAC
		10mA, 5VDC
	Over Travel	0.15mm(Mlin)
	Operating Force	4.5N

2-SPDT Type

SPDT TYPE	Switch Type	2 X SPDT
	Rating	16A 1/2HP 125/250VAC
		0.6A 125VDC, 0.3A 250VDC
		5A 125VAC L T130
	Over Travel	0.8mm Max
	Differential Force	1.6mm Max

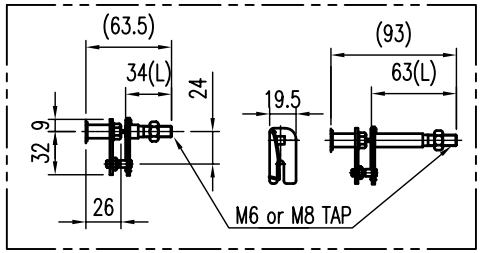

FORK LEVER TYPE

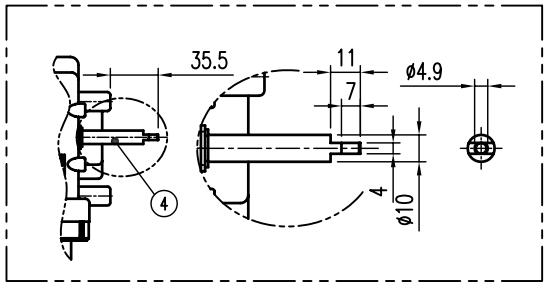

NAMUR SHAFT TYPE

NO.	PART NAME	MATERIAL	Q'TY	REMARK
6	INDICATOR	PLASTIC	1	
5	PRESSURE GAUGE	STS 304	1	
4	CONNECT LEVER ASS'Y	STS 303. 304P	1	FORK LEVER, NAMUR
3	JUNCTION BOX	ALDC12	1	
2	BASE COVER	ALDC12	1	
1	BASE BODY	ALDC12	1	

SURFACE TEXTRUE		PRODUCT NAME E/P POSITIONER with L/S (INTERNAL)	YOUNG TECH CO., LTD. SEOUL, KOREA
FINISH TREATMENT		MODEL YT-1000R	TITLE ELECTRO PNEUMATIC ROTARY POSITIONER ASS'Y DWG with L/S (INTERNAL)
MATERIAL		PROJECTION 3rd / SCALE 1 / 4	
OTHERWISE NOTE	GENERAL TOLERANCE	QUANTITY 1 / SHEET No. 1 / 1	DRAWING NO. YT-1000R - L/S (INTERNAL) / REV. 4

YTC-A3